RelyEZ

Stock code: 09621.HK

# GLOBAL ENERGY STORAGE SYSTEM & ASSET OPERATIONS SOLUTIONS PROVIDER

RelyEZ Energy Storage Technology Co., Ltd.

Create Tier-1 BESS Assets


Reiyer

# United by Energy
# Powered by Innovation

Reliability and humanity power our renewable energy storage solutions. We thrive on imagination, discovery, and innovation, fostering a culture that unlocks every team member's potential.

By marrying human-centric values with groundbreaking technologies, we not only advance reliable renewable energy but also empower communities worldwide.



We are defining the future of access to renewable energy, crafting superior storage solutions that inspire the next generation of renewable power systems. Our expertise spans the entire spectrum of lithium-ion energy storage: from utility-scale projects to commercial and industrial applications, and innovative micro-grids.

Driven by a commitment to human-centered technology, our team continuously expands our capabilities to create a greener, more eco-friendly future for all. With three cutting-edge facilities capable of a combined annual output of 20 GWh, we are setting new standards in energy-solution production, ensuring unparalleled resilience and efficiency.



# The Visionaries Powering Our Business

With over 16 years of green energy storage expertise, our seasoned professionals offer unmatched technical support and guidance, ensuring reliability at every step.

Our robust enterprise management system champions continuous improvement, ensuring efficiency, sustainability, and innovation at every level of operation.



## Tony Wong Co-founder & Chairman of RelyEZ Energy

- Senior executive leading the solar + storage business
- Bachelor's and Master's degrees from Sun Yat-sen University
- Extensive experience in large-scale energy storage projects both domestically and internationally
- Former senior executive at a publicly listed A-share company. Responsible for the development and construction of renewable energy generation projects, including photovoltaic, wind, and solar thermal, as well as energy storage projects



## Naomi Zhang Co-founder & CEO of RelyEZ Energy

- Over six years of experience in the clean energy industry and ten years of experience in corporate financing
- Experienced in both the new energy sector and capital markets. Rich overseas channels and business resources
- Master of Science in New Media from The Chinese University of Hong Kong; completed Stanford University's Quantitative Finance Certificate program
- Previously worked at DuPont (Hong Kong), Shengang Securities, and Yongxing Securities



## Guillermo Gallego Father of Dynamic Pricing

- Dean of the School of Data Science at The Chinese University of Hong Kong, Shenzhen, and Liu Family Professor Emeritus at Columbia University
- An INFORMS Fellow, MSOM Distinguished Fellow, and pioneer in dynamic pricing and revenue management
- His research spans operations research, data science, power market trading, energy storage revenue optimization, and AI-driven decision-making



## Stephen Ye Global Investment Director

- Over 25 years of experience in cross-border M&A, Chinese outbound investment, private equity, and corporate finance
- Has advised renewable energy, mining, and infrastructure transactions across Europe, Africa, Southeast Asia, and other markets
- Previously worked with leading Chinese and international law firms and held senior investment roles in Hong Kong business groups



## Peter Lau Managing Director, Intemnational Projects & Capital

- Over 25 years of experience in sustainable finance, private equity, international investment strategy, and capital markets
- Leads RelyEZ's global financing strategy and capital market engagement for international energy transition projects
- Previously held senior investment roles at SDCL and HSBC Principal Investments, with experience across Asia-Pacific, the U.S., and Europe



## Chen Zhu General Manager & Vice President of Shanghai RelyEZ

- Graduate of Shanghai University of Finance and Economics, with 8 years of corporate financing experience and 15 years in new energy investment and financing
- Previously worked at Ping An and Bangyin Financial Institutions, serving listed companies and state-owned enterprises
- Focuses on Japanese and African markets, leading photovoltaic and integrated energy projects



## Joey Chen Vice President of Overseas Sales

- Extensive experience in energy storage, driving business expansion through partner networks and targeted sales strategies
- Plays a key role in RelyEZ Energy's go-to-market strategy, market penetration, and long-term client development
- Supports regional and global business growth with strong customer relationships and decisive leadership



## Jonathan Wei Head BD of Africa Region

- Over 15 years of international project expansion experience, with strong expertise in large-scale project development and delivery
- Previously led ZTE operations in several countries, managing major market development and project implementation
- Based in Kenya, he drives RelyEZ's strategic growth and new energy initiatives across Africa



## Pawel Jamrozek Regional Director, CEE

- Over 15 years of experience in energy infrastructure development, due diligence, and mergers & acquisitions
- Has worked with leading institutions including IFC, EBRD, EIB, the European Commission, and EDF Group
- Brings cross-functional expertise as a business developer, technical advisor, and financial advisor



## Michelle Cross Director of Business Development Europe

- Leads strategic partnerships and market expansion for bankable BESS projects across Europe
- Has over 10 years of experience in international business development, renewable energy, project finance, and grid-scale storage solutions
- Holds an Executive MBA from INSEEC and a Sustainable Business Strategy credential from Harvard University



## Guillermo Luis Vaquera Director, Iberia

- I lead RelyEZ's expansion in Spain and Portugal, focusing on C&I and utility-scale BESS markets.
- I combine strategic and technical insight to build partnerships with EPCs, IPPs, and technology partners.
- My goal is to turn opportunities into projects and connect innovation with real market needs.

# An integrated ESS solutions provider focusing on empowering high quality energy storage assets worldwide

## Established in 2019, RelyEZ Energy Storage is a high-tech enterprise headquartered in Shenzhen, China.

Founded in 2019, RelyEZ Energy Storage Technology Co., Ltd. is a global Energy Storage System & Asset Operations Solutions Provider. The company focuses on the development of new power systems and integrated energy solutions, as well as the research, development, and promotion of sustainable renewable energy solutions and reliable energy storage products. With the vision of "Create Tier-1 BESS Assets," RelyEZ provides professional support throughout project development and deployment, and has established a comprehensive industry chain that covers product R&D, manufacturing, sales, and services.

RelyEZ Energy's business is focused on medium- to large-scale power systems and integrated energy solutions, covering applications such as grid-side energy storage, integrated wind-solar-diesel-storage systems, microgrids, AIDC energy storage, new energy generation, and commercial & industrial energy storage. The company's team gathers numerous senior experts in the new energy industry and has served over 100 global clients. RelyEZ has successfully provided safe and stable solutions for several energy and power projects. As of 2026, the company has delivered energy storage system solutions and products totaling more than 13 GWh.

From 2024 to 2026, RelyEZ Energy has maintained its position on BloombergNEF's (BNEF) Global Tier-1 Energy Storage Manufacturer List. It also ranks among the top performers in S&P Global's supplier evaluations. RelyEZ's products are supported by long-term warranty coverage from Munich Re, ensuring the safety and reliability of its projects.



# Achievements & Recognition

**BNEF Tier 1**
BloombergNEF

**TOP 10**
S&P Global

**A**
Battery StorageTech Bankability Ratings Report 2026 Q3

**Munich Re**
15-Year Reinsurance Coverage

## Global No. 1
Ranked first among global full-lifecycle energy storage solution providers by newly installed capacity in 2025, according to Frost & Sullivan

## A rating awarded in the Q3 2026
Battery StorageTech Bankability Report by Informa Markets & PVTech

## Bloomberg NEF Tier-1
2024-Now

## S&P Global Top 10
Original Battery Energy Storage System Provider

## Munich Re
15-Year Warranty Backed by Munich Re

## Best System Integration
Solution Provider In Energy Storage Industry, 2022

## Top 13 Best-selling
Products in the World

## GGII second in DC
Battery Cabin Energy Storage Enterprise Shipments in China

## EESA Awards
Fifth in Global DC-Side Energy Storage System Solution Shipments

## Top 5 InfoLink's
Global Energy Storage System Integrators for DC-Side Shipments Q1 2025

## ISO9001
Quality Management System Certificate

## ISO14001
Environmental Management System Certificate

## ISO45001
Occupational Health and Safety Management System Certificate

## ISO50001
Energy Management System Certified

## UL and IEC-certified
Product Range



# Development History

## 2019

- RelyEZ Energy was established
- Successfully deployed an 80 MWh energy-storage project in China

## 2020

- Completed a 40 MW/193 MWh photovoltaic + energy storage project in Tibet, one of the world's highest-altitude benchmark projects

## 2021

- Started construction of the Jiangsu factory
- Awarded National Best System Integrator

## 2022

- Began construction of Yao'an and Dali factories (Yunnan, China)
- Delivered over 2 GWh throughout the year
- Ranked 8th in national shipments, 13th globally
- Ranked in the TOP 10 of S&P Global Energy Storage System Suppliers

## 2023

- Established the Gansu Jinchang factory
- Delivered 2.8 GWh throughout the year
- Ranked second globally in 2023 by CNESA for shipments
- Ranked second globally in DC-side shipments by GGII in 2023
- Ranked second in domestic DC-side shipments in China by EESA; ranked fifth globally in DC-side shipments

## 2024

- Ranked Tier-1 energy storage manufacturer by Bloomberg in 2024
- Ranked in the TOP 10 of S&P Global Energy Storage System Suppliers
- Completed the 300 MW/600 MWh Yunnan Yongren project, one of the first demonstration projects in Yunnan Province, and the fourth-largest single project in China as of August

## 2025

- Managed assets exceeding 4 GWh
- Delivered a flagship 500 MW/2 GWh energy storage project in Inner Mongolia
- Successfully completed the delivery of four large energy storage projects totaling 1.5 GWh in Yunnan
- Achieved new breakthroughs in overseas markets, signing or winning bids for energy storage projects in the United States, Hungary, Japan, Chile, Poland, and several West African countries
- Launched the second growth curve in asset operation, fully deploying asset operation and management services
- Fully developed EMS and AI-powered asset-management software in-house
- Initiated the Company's IPO process

## 2026

- Listed on the Hong Kong Stock Exchange on 9 November (09621.HK)
- Established a plant in Yibin, Sichuan, southwestern China
- Raised several hundred million yuan in equity financing
- Launched RelyEZ OS, an AI-powered energy storage ecosystem designed to increase storage revenue
- Entered Europe's automatic frequency restoration reserve (aFRR) market with a 110 MWh project in Hungary and technical support at every stage
- GridUltra liquid-cooled storage system earned the world's first notified body (NB) certificate for energy storage under the EU Batteries Regulation
- Grid connection of a 150 MW / 300 MWh independent shared energy storage plant
- Ninth inclusion on BloombergNEF's Tier 1 energy storage list
- Named a national key "Little Giant" enterprise in China
- Secured storage orders in France (500 MWh) and Poland (120 MWh)

# Global Strategy

RelyEZ Energy has built a strong global presence, with projects and solutions deployed across key international markets. Backed by proven domestic project experience and full-lifecycle energy storage capabilities, we continue to deepen our overseas business, strengthen local partnerships, and create long-term value for global energy transition.

## Subsidiaries

Guangxi Zhixin | Jinchang Zhixin | Liaoning RelyEZ | Shanghai RelyEZ | Hong Kong RelyEZ | Singapore RelyEZ | USA RelyEZ | Germany RelyEZ | South Africa RelyEZ | Cyprus RelyEZ

## Business Regions

We have signed sales contracts or orders with clients in China, the United States, Japan, Hungary, Poland, Spain, Mexico, Kenya, and Burkina Faso.

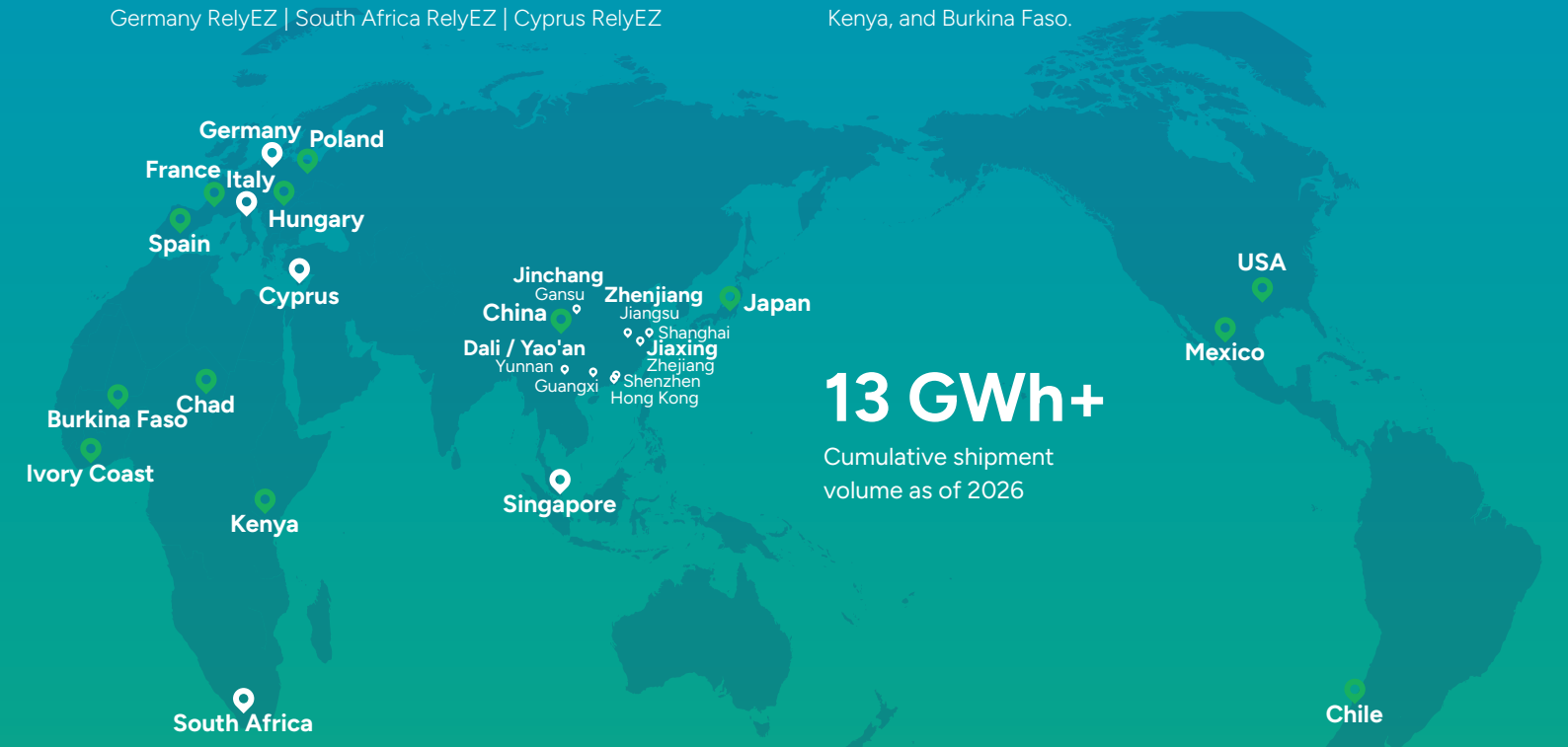


**13 GWh+**

Cumulative shipment volume as of 2026

## Domestic Demonstration Projects

Yongde, Yao'an, Nanhua & Xundian, Yunnan, China — Four standalone energy storage projects, total 1.5 GWh

Ulanqab, Inner Mongolia, China — 500 MW / 2 GWh standalone energy storage project

Yongren, Yunnan, China — 300 MW / 600 MWh standalone energy storage project

Yongchuan, Chongqing, China — 200 MW / 400 MWh standalone energy storage project

## Overseas Projects

| | |
|---|---|
| Poland Project 1 | 4 MW / 16 MWh |
| Poland Project 2 | 3 MW / 12 MWh |
| Poland Project 3 | 2 MW / 8 MWh |
| Poland Project 4 | 1 MW / 4 MWh |
| Poland Project 5 | 1 MW / 2 MWh |
| Poland Project 6 | 1 MW / 2 MWh |

| | |
|---|---|
| Hungary Project 1 | 55 MW / 110 MWh |
| U.S. Project 1 | 73.6 MW / 160 MWh |
| U.S. Project 2 | 3.13 MWh |
| U.S. Project 3 | 250 kW / 500 kWh |

Chile 20 MW / 80 MWh

Burkina Faso 40 MWp + 10 MW / 40 MWh

Chad 2 MW / 6.4 MWh

Kenya 3.75 MWh BESS + 1.2MW PV + D.G

Japan 373 MW / 745 MWh

# Core Business Lines

## At RelyEZ, we're more than just a manufacturer of Battery Energy Storage Systems (BESS).

## We're pioneering comprehensive energy solutions that are reshaping the renewable energy landscape.

Our products cover power-generation side, grid-side, microgrid and user-side, and can be customized for utility-scale, commercial and industrial energy storage systems. We provide one-stop full-process service spanning upstream project development + R&D + manufacturing.

Developed in-house by our team of expert software engineers, our EMS EnergyHub leverages AI-driven algorithms and predictive analytics to optimize energy flow, enhance grid stability, and maximize return on investment. This intelligent software forms the brain of our energy storage solutions, ensuring seamless integration with existing infrastructure and enabling smart, efficient energy management for our clients.

16 years of rich industry R&D experience has led to several firsts, including the industry's first large-scale energy storage project integration, the first set of DC-side distributed energy storage cases and more. The company independently developed a 1500V liquid-cooling system, laser-welding equipment, and battery-testing platforms, along with a liquid-cooled battery pack solution to ensure the ultimate safety of the system and achieve the lowest LCOS.



### Utility Scale Energy Storage

Providing large-scale power storage solutions for generation side and grid side applications, with multiple safety protection designs to optimize the system's full-lifecycle cost.

### Commercial & Industrial Energy Storage

Introducing the next-generation commercial and industrial energy storage system, balancing cost optimization and operational efficiency, suitable for distributed power stations, industrial parks, smart buildings, communities, and solar-storage-charging applications.

### Microgrid + Energy Storage

Providing microgrid + energy storage solutions, integrating surrounding renewable energy sources, mobile generation, and storage facilities to build an adaptive energy network, enhancing the stability of clean power supply.

### AIDC Energy Storage

Providing reliable energy storage solutions for AI data centers, supporting stable power supply, backup power, peak shaving, and greener, more resilient digital infrastructure.

# Production Bases

## Three Major Automated Production Bases

RelyEZ Energy has three production bases in Zhenjiang, Jiaxing, and Yao'an, with a combined designed annual capacity of over 20 GWh. The laboratory at Zhenjiang base has achieved IECEE CTF Stage 2 recognition, reflecting international recognition of its testing capabilities and quality management system. This enables on-site witnessed testing, supporting R&D and global expansion.

Zhenjiang, Jiangsu ▼




Yao'an, Yunnan ▼



Wuzhen, Zhejiang ▼



# Research and Development Roadmap

As a pioneer in energy storage technology evolution, we leverage our deep software-hardware integration DNA to build the RelyEZ OS full-stack digital intelligence foundation based on "cloud-edge collaboration." Deeply integrating AI agent parallel prediction algorithms, big-data multi-dimensional perception and cloud-based advanced inference technologies, we are driving product evolution from mere physical delivery to full-lifecycle intelligent stewardship covering "prediction-monitoring-optimization". With powerful computing power, we enable energy storage assets to deliver higher returns, enhanced safety and greater availability, intelligently creating a new future for energy services.

## 1+1+N

### Full-Scenario Energy Solutions

AI and big data empower a new grid-forming solution, customized to address energy needs

Full-scenario energy coverage, boosted power revenue



### EMS and Cloud Platform

Massive device access across multiple scenarios, rapid frequency regulation and ancillary response; integrates cloud-based AI algorithms and prediction models to autonomously generate forecasts and recommend trading strategies, precisely capturing revenue windows.

### DC Battery Cabin

Adapting to the upgrade needs of large-format battery cells, we are developing and rolling out full-immersion + large-cell energy storage battery cabins. The immersion liquid cooling design effectively mitigates thermal runaway risks and optimizes thermal efficiency and cycle life performance.

### Solutions

Grid-forming solutions and integrated AC/DC products, tailored for ultra-large-scale energy storage scenarios and high-efficiency requirements.

### Power Conversion System

Targeted at the low-to-medium power segment, serving as critical connectors for off-grid and microgrid applications.

### Three-Dimensional Revenue

Guided by the "hardware + software + energy services" three-dimensional revenue model, we establish a diversified business closed loop, deeply participate in electricity spot trading, and optimize capacity tariffs, frequency regulation ancillary services and spot trading strategies to maximize the per-kWh revenue of energy storage assets throughout their entire lifecycle.

# Technical Advantages

## Immersion Liquid-Cooled Energy Storage Products

### PACK
Extremely Safe and Stable

- Cells are immersed in an insulating coolant, effectively isolating oxygen and significantly reducing thermal runaway risks through multiple safety protection designs, delivering excellent safety characteristics.
- Combined with AI algorithms, precise temperature control within <2 °C is achieved, reducing system energy consumption by over 20% compared to traditional solutions.
- Deep integration of temperature control and BMS enables cycle life exceeding 10,000 cycles, with a design life of 20 years.
- Supports stable operation in extreme temperatures from -20 °C to 50 °C and high-altitude environments.

### Integrated Cabinet
Efficient and Precise Isolation

- Immersion liquid effectively isolates oxygen, comprehensively enhancing the intrinsic safety of the system.
- By integrating dynamic temperature control with AI algorithms, system cycle efficiency is improved by over 1%, with PCS peak efficiency reaching 99%.
- Single-cluster fine control, no parallel connections, and independent cabinet design achieve dual isolation for electrical safety and fire protection.
- Cell temperature difference controlled within ≤2.5 °C, significantly improving safety and cycle life.

### Large-Scale Storage
Reliable and Robust Heat Dissipation

- Immersion liquid cooling thoroughly suppresses thermal runaway propagation, fully meeting stringent overseas fire and explosion protection standards.
- Specifically designed for high-capacity, high-load scenarios, providing robust heat dissipation to ensure long-term reliable operation.



# EMS+AI

## Cloud-Edge Collaboration

Under the cloud-edge collaboration architecture, RelyEZ Energy Storage builds an integrated coordination capability from cloud decision-making to station-level autonomy through EMS + AI.

## Cloud Side

At the cloud level, the system aggregates multi-source market and weather data, establishing revenue models based on electricity price forecasting and strategy optimization. Through EMS cloud platform model training, strategy iteration, and global optimization functions, it continuously delivers targeted analysis and decision-making results based on market changes and asset performance, providing centralized intelligent decision-making for energy storage project development, trading operations, and asset management.

## Station Side

At the station level, EnergyEMS+ deploys local AI models to perform edge inference, boundary verification, precise control, and rapid response, ensuring stable on-site strategy execution. The system connects downward to PCS, BMS, battery cabins, wind power, photovoltaic, and other physical assets, integrating state collection, anomaly detection, SOH health assessment, execution deviation monitoring, and local strategy correction to continuously enhance real-time performance, stability, and autonomous regulation on site. In weak-grid or off-grid scenarios, the station maintains core control and local strategy execution, demonstrating strong autonomous operation capabilities.



# Projects




## Hungary, Europe | 110 MWh

The Hungarian BESS market imposes stringent requirements on grid-connection certification and grid-support capability. Under this background, RelyEZ—through its outstanding system-integration and certification capability—has recently commissioned three large-scale, grid-side BESS projects totaling 110 MWh. RelyEZ supplies the complete battery energy storage system and will ensure that every project secures EU aFRR certification, laying the groundwork for compliant grid connection and revenue realization.

The Hungarian projects efficiently integrated new energy-storage systems with conventional thermal generation. Leveraging the peak-shifting capability of the battery systems, the BESS optimizes power output and power quality. By charging during off-peak periods and discharging at peak times, the installations smooth grid-power fluctuations; simultaneously, the BESS acts as an active-power sources for frequency regulation. RelyEZ's integrated primary and secondary frequency-regulation functions interface seamlessly with the legacy grid's communication network, smoothing frequency excursions and enhancing power quality.

# Yunnan Four Major Standalone ESS Projects, China 1.5 GWh (Yongde, Yao'an, Nanhua, Xundian)

- Smoothes new energy output fluctuations, enhances grid regulation capacity in central Yunnan and facilitates clean energy accommodation
- Large-scale grid side standalone shared energy storage project, serving as an intelligent energy storage benchmark in central Yunnan
- Adopts a dual revenue model of "regulation capacity + electric energy", balancing leasing income and electricity market trading revenue



## 2025 / Yongde, Yunnan

150 MW / 300 MWh Grid-Forming Energy Storage Project



## 2025 / Yao'an, Yunnan

200 MW / 400 MWh Stand-Alone Energy Storage Project



## 2025 / Nanhua, Yunnan

200 MW / 400 MWh Stand-Alone Energy Storage Project



## 2025 / Xundian, Yunnan

200 MW / 400 MWh Stand-Alone Energy Storage Project



## Burkina Faso, Africa | 10 MW / 40 MWh | PV: 40 MWp

In West Africa, RelyEZ successfully won the bid for a large-scale EPC project in Burkina Faso—40 MWp of PV coupled with 40 MWh of BESS—taking full responsibility for system integration and construction management. The project will significantly ease power shortages in the Koudougou area; through PV-plus-BESS synergy it will boost supply reliability and grid stability, demonstrating RelyEZ's capability to deliver sustainable energy infrastructure in challenging environments. Advance green-energy infrastructure and set a benchmark for sustainable regional energy development.



## Japan, Asia | 373 MW / 745 MWh

Starting from 2024, Leveraging its in-depth knowledge of Japan's BESS capacity market and power-regulation mechanisms. RelyEZ has pioneered and led BESS projects totaling 745 MWh,  and a total investment of approximately US$260.5 million.

Covering the full value chain from development, construction, and equipment supply to grid-connection testing and long-term O&M. During project execution, RelyEZ will draw on strong local-partnership capabilities and whole-life-cycle operating experience to systematically solve multi-vendor and multi-regime integration challenges, delivering Japanese customers a stable, reliable and continuously optimized energy storage solution.



## Chad, Africa

*6.4 MWh (Off-grid)*

Photovoltaic Diesel Storage Project



## Kenya, Africa

*3.75 MWh BESS + 1.2 MW PV + DG*

PV-storage-diesel microgrid Project



## Ulanqab, Inner Mongolia

*— 500 MW / 2,000 MWh*

Energy Storage Project




## Shanwei, Guangdong

*— 200 MW / 400 MWh*

Electrochemical Energy Storage Project



## Yongren, Yunnan

*— 300 MW / 600 MWh*

Stand-alone Energy Storage Project



## Continental AG, Anhui

*— 16 MW/40 MWh*

Photovoltaic Diesel Storage Project



## Gaoqing, Shandong
*— 150 MW/300 MWh*

Standalone Shared Energy Storage Station Project



## Yongchuan, Chongqing
*— 200 MW / 400 MWh*

Energy Storage Project



## Alxa Ulanbuhe, Inner Mongolia
*— 20 MW / 40 MWh*

Solar and Storage Project



## Jiangbei, Nanjing
*— 110 MW / 193 MWh*

Power Station Project



## Suqian, Jiangsu
*— 15 MW / 30 MWh*

Light Storage Project



## Yongdeng, Gansu
*— 30 MW / 60 MWh*

Solar and Storage Project

# DeepCore Pack

## Next-Generation Immersion-Cooled BESS



## PRODUCT FEATURES

### Precise Uniform Cooling

Full-cell temperature sensing & AI cooling limits maximum cell temperature difference to ≤2°C

### High Density & Long Lifespan

≥130Wh/kg cell energy density, ≥10,000 cycles, 20-year design life

### Bidirectional Active Equalization

Prevents overcharge/overheat & thermal risks, boosts usable capacity

### AIDC Reliable Fire Shielding

IP68 Pack-Level sealed protection confines fault gas inside to eliminate cabinet explosion hazards

## PRODUCT SPECIFICATIONS

| Item | DeepCore Pack |
|---|---|
| Battery Parameters | |
| Nominal Voltage | DC 166.4 V |
| Minimum Operating Voltage | DC 130 V |
| Maximum Operating Voltage | DC 189.8 V |
| Max Continuous Charge/Discharge Current | 200 A/0.5P |
| Self-Discharge Rate | ≤3% per month |
| Nominal Capacity | 314 Ah |
| Nominal Energy | 52.249 kWh |
| Energy Density | ≥130 Wh/kg |
| Basic Parameters | |
| Dimensions (LxWxH) | 1230 x 810 x 260(mm) |
| Weight | 380±10 kg |
| IP Rating | IP68 |
| Cooling Method | Immersion Liquid Cooling |
| System Cycle Life | ≥10000 cycles |
| Temperature Monitoring Points | ≥26 points/box |
| Insulation Level | ≥1000 MΩ |
| Storage Temperature | 0 to 45℃, RH≤65% |
| Configuration | 1P52S |

*This document is regularly updated for accuracy and improvement. Please verify you are using the latest version. Illustrations are for reference only.*

# GridUltra Liquid-Cooled Energy Storage Battery System

## GridUltra 4180 | GridUltra 5016

Uses customized non-walk-in containers, with a modular design that improves space utilization within the cabin. The advanced liquid cooling circulation design helps suppress the spread of battery thermal runaway, extending the service life of the energy storage system and improving system safety.




## PRODUCT FEATURES

### Modular Container System

Uses customized non-walk-in containers with a modular design, high integration, supporting fast delivery, quick installation, and maintenance.

### Long-Life Liquid-Cooled Battery System

The liquid-cooled battery system has excellent energy efficiency, with a cycle life ≥8000 cycles and a design life of approximately 15 years. Ensures stable operation.

### Smart Liquid-Cooled Safety Compartment

The battery compartment has an IP55 rating, features a smart fire protection system design with multi-point monitoring and warning, and has fire extinguishing capability. The liquid cooling system delivers excellent battery temperature uniformity, with a system cell temperature difference ≤3 °C.

# PRODUCT COMPOSITION

### Energy Storage System

The battery compartment contains 10/12 battery racks, 1 bus distribution panel, 1 fire protection system, and 1 liquid cooling system.

### Battery Cluster

Each battery cluster consists of 8 liquid-cooled battery modules and 1 high-voltage control box connected in series.

### Battery Module

Each individual battery module is composed of 52 314 Ah lithium iron phosphate cells configured in a 1P52S arrangement. It features a compact structure, wide temperature tolerance, long service life, IP55 protection, and multiple safety features.

# PRODUCT SPECIFICATIONS

| Item | GridUltra 4180 | GridUltra 5016 |
|---|---|---|
| | **Battery Parameters** | |
| Configuration | 10P416S | 12P416S |
| Nominal Energy | 4180 kWh | 5016 kWh |
| Nominal Voltage | DC 1331.2 V | |
| Voltage Range | DC 1164.8 to 1497.6 V | |
| | **0.25P** | **0.5P** |
| Rated Charge Current | 785 A | 1884 A |
| Max Charge Current | 1000 A | 2411 A |
| Rated Charge Power | 1045 kW | 2500 kW |
| Rated Discharge Current | 785 A | 1884 A |
| Max Discharge Current | 1000 A | 2411 A |
| Rated Discharge Power | 1045 kW | 2500 kW |
| Auxiliary Power Voltage | Adapted to Local Grid Voltage | |
| Operating Temperature | -30 to 50℃ | |
| Application Altitude | ≤2000 m/<3000 m (Optional, Derated) | |
| Battery Compartment Short Circuit Current | 12.5 kA*10 | 12.5 kA*12 |
| DC Output Branch Quantity | Single Output | |
| BMS and PCS Communication Method | Supports CAN/Modbus485/TCP Communication, CAN Communication Recommended | |
| | **Basic Parameters** | |
| Product Dimensions (LxWxH) | 6058x2438x2896(mm) | 6058x2438x2896(mm) |
| Weight | Approximately 36.5 t | Approximately 42 t |
| Container IP Rating | IP55 | |
| Module IP Rating | IP67 | |
| Cooling Method | Liquid Cooling | |
| Acoustic Noise | <71 dB (1m) | <79 dB (1m) |
| Certifications/Reports | UL 60730-1、UL9540、UL1973、UL9540A、IEC 62619、IEC 60730-1、IEC 63056、IEC 62477-1、IEC 61000-6-2/4、(EU) 2023/1542、UN 38.3、UN 3536 | |
| | **Warranty** | |
| Standard | 5 years (Included) | |
| Extended Warranty | 15 years-covered by Munich Re | |

*This document is regularly updated for accuracy and improvement. Please verify you are using the latest version. Illustrations are for reference only.*

# GridUltra Liquid-Cooled Energy Storage Battery System

## GridUltra 5016-6

It utilizes a customized non-walk-in container, and its modular design enhances the interior space utilization rate. The advanced cluster-level architecture design concept enables one-cluster-one-management, effectively improving the all-around safety of the energy storage system and the full lifecycle of the energy storage batteries, providing a safer technical guarantee for the operation of the energy storage system.




## PRODUCT FEATURES

### Modular Container System

Uses customized non-walk-in containers with a modular design and high energy density, enabling short project delivery lead times and easy installation and maintenance.

### Long-Life Liquid-Cooled Battery System

The liquid-cooled battery system features a long lifespan and high efficiency, with a system cycle life exceeding 8,000 cycles and a design life of up to 15 years.

### Smart Liquid-Cooled Safety Compartment

The liquid-cooled module features an IP67 protection rating, a smart fire protection system design with multi-point monitoring and warning, and rapid fire extinguishing capability. The liquid cooling system delivers excellent battery temperature uniformity, with the system cell temperature difference controlled within 3°C.

# PRODUCT COMPOSITION

### Energy Storage System

The battery compartment contains 6 battery racks, 1 AC/DC system, 1 fire protection system, and 1 liquid cooling system, among other components.

### Battery Cluster

Each rack consists of 2 battery clusters and 1 integrated PCS. Each cluster is composed of 4 liquid-cooled battery modules connected in series.

### Battery Module

Each individual battery module is composed of 104 pieces of 314Ah LFP cells configured in a 1P104S arrangement. It features high energy density, a wide operating temperature range, long service life, high protection rating, and multiple safety features.

# PRODUCT SPECIFICATIONS

| Item | GridUltra 5016-6 |
|---|---|
| | **DC Side Parameters** |
| Configuration | 6P416S |
| Nominal Energy | 5016 kWh 0.5P, 100% DOD |
| Nominal Voltage | DC 1331.2 V |
| Voltage Range | DC 1040 to 1518.4 V |
| | **AC Side Parameters** |
| Rated AC Power | 6x450 kW |
| Rated Current | AC 6x376 A |
| AC Voltage Range | AC 690 V (-15% to 10%) |
| Rated Frequency | 50Hz / 60Hz + 2.5Hz |
| Overload Capability | 1.1× continuous, 1.2× for 1 min, 1.5× for 10 s |
| THDI | <3% (Rated Power) |
| | **Basic Parameters** |
| Auxiliary Power Supply Voltage | AC 380 V |
| Dimensions (LxWxH) | 6058x2438x2896 (mm) |
| Weight | Approximately 45 t |
| IP Rating | IP55 |
| Cooling Method | Full Liquid Cooling |
| Humidity | 0 to 95% (Non-Condensing) |
| Operation Ambient Temperature | -30 °C to 50 °C |
| Max Allowable Altitude | ≤3000 m/<4000 m (Optional, Derated) |
| Communication Interface | RS-485: Ethernet: CAN |
| Communication Protocol | CAN /Modbus-TCP/RTU |

*This document is regularly updated for accuracy and improvement. Please verify you are using the latest version. Illustrations are for reference only.*

# VentureBooster Liquid-Cooled Energy Storage System

## VentureBooster 800

Features an integrated AC-DC design. "One Cluster, One Management" enables fine-grained energy management and status diagnostics at the rack level, fundamentally solving the "cask effect" and improving system energy utilization. The advanced liquid cooling circulation design reduces the impact of battery thermal runaway propagation, effectively enhancing overall system safety and extending the full service life of energy storage batteries, providing a safer technical guarantee for system operation.




## PRODUCT FEATURES

### Technical Advantages

- **Simplified architecture:** Eliminates the need for energy storage transformers.
- **Higher efficiency:** Reduces conversion loss by approximately 1%.
- **Lower initial investment:** Smaller footprint, fewer components, and lower costs.

### Customer Value

- **Better investment returns:** Saves transformer costs for faster payback.
- **Lower total cost of ownership:** Higher energy output with simpler maintenance.
- **Flexible deployment:** Easy expansion, can be directly adapted to existing photovoltaic sites.

### Application Scenarios

Suitable for expanding existing 800 V photovoltaic systems.

# PRODUCT COMPOSITION

### Energy Storage System

The battery compartment contains 5 battery clusters, 5 PCS, 1 control cabinet, 1 fire protection system, and 1 liquid cooling system.

### Battery Cluster

Each battery cluster consists of 4 liquid-cooled energy storage modules and 1 high-voltage control box.

### Liquid-Cooled Energy Storage Modules

Each liquid-cooled energy storage module consists of 104 pieces of 314Ah LFP cells configured in a 1P104S arrangement. It features high energy density, wide operating temperature range, long service life, high protection rating, and multiple safety protections.

# 800V AC-COUPLED SOLAR-STORAGE SOLUTION

**RelyEZ**

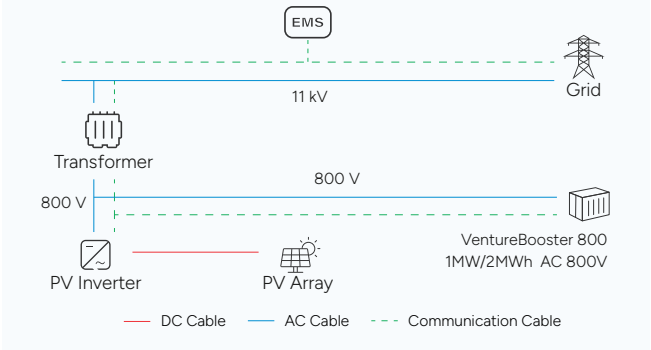


**Traditional**

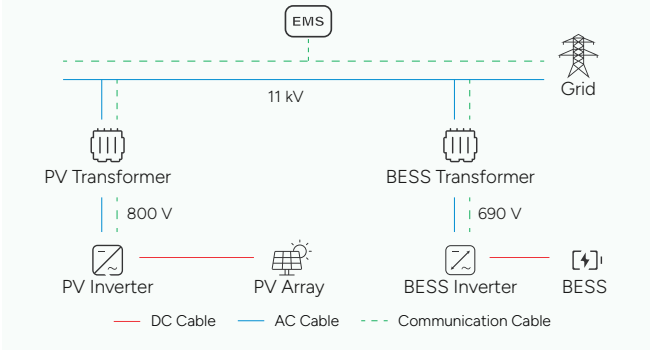


# PRODUCT SPECIFICATIONS

| Item | VentureBooster 800 |
|---|---|
| | **DC Side Parameters (0.5P)** |
| System Nominal Energy | 5x418 kWh |
| Single Unit Configuration | 416 S |
| Rated DC Current | 157 A |
| Max DC Current | 179.4 A |
| DC Voltage Range | DC 1164.8 to 1497.6 V |
| | **System Parameters** |
| Rated AC Power | 5x200 kW |
| Rated AC Voltage | AC 800 V |
| Rated Frequency | 50 / 60 Hz |
| Rated Current | 5x145 A |
| Power Factor | 0.99/-1 to 1 |
| THDI | <3% (Rated Power) |
| | **Basic Parameters** |
| Maximum system efficiency | 88% (Auxiliary Power Excluded) |
| Auxiliary power consumption | 22 kW |
| Fire Suppressant | Electrically Activated Aerosol |
| Cooling Method | Liquid Cooling for Battery Modules / Air Cooling for PCS |
| Dimensions (LxWxH) | 6058x2438x2896 mm |
| Weight | Approximately 23.5 t |
| Operating Temperature | -30 to +55℃ |
| Operating Humidity | 0 to 95% |
| IP Rating | IP55 |
| Altitude | ≤2000 m/<3000 m (Optional, Derated) |
| Acoustic Noise | ≤ 75 dB (1m) |
| Certifications/Reports | IEC 62619、IEC 60730-1、IEC 63056、IEC 62477-1、IEC 61000-6-2/4、(EU) 2023/1542、UN 38.3、UN 3536 |

*This document is regularly updated for accuracy and improvement. Please verify you are using the latest version. Illustrations are for reference only.*

# VenturePro Fusion Liquid-Cooled Modular Battery System

## YXYK-552314-E | YXYK-652314-E | YXYK-752314-E | YXYK-852314-E

VenturePro Fusion is an intelligent, modular and flexibly configured product consisting of 1 control cabinet and 1 to 8 VenturePro battery cabinets, with a single system meeting energy demands from 0.261 MWh to 3.344 MWh.

VenturePro Fusion integrates liquid-cooled modules, a new-generation BMS control system, an intelligent liquid-cooled temperature control system and an active fire protection system, suitable for applications such as PV-storage integration, wind-storage integration and microgrids.




## PRODUCT FEATURES

### Flexible Expansion Solution

Expansion ports are reserved on control cabinets and battery cabinets to support parallel expansion of multiple cabinets, enabling flexible system capacity configuration based on project requirements.

### Easy and Fast Installation

Adopts a standardized quick-connect interface design to simplify on-site installation procedures.

### Dual Protection System

Dual hardware and software protection for the main circuit, coupled with independent battery cabinets and an active fire protection system to ensure operational safety.

# LIQUID-COOLED MODULAR BATTERY RACK INTEGRATION

Liquid-cooled modular battery cabinet units support parallel combination of 1 to 8 units



# PRODUCT SPECIFICATIONS

| Item | YXYK-552314-E | YXYK-652314-E | YXYK-752314-E | YXYK-852314-E |
|---|---|---|---|---|
| **Battery Parameters** | | | | |
| Configuration | 1P260S | 1P312S | 1P364S | 1P416S |
| Nominal Energy | 261 kWh | 313 kWh | 365 kWh | 418 kWh |
| Nominal Voltage | DC 832 V | DC 998.4 V | DC 1164.8 V | DC 1331.2 V |
| Voltage Range | DC 728 to 936 V | DC 873.6 to 1123.2 V | DC 1019.2 to 1310.4 V | DC 1164.8 to 1497.6 V |
| **System Parameters** | | | | |
| Rated Charge/Discharge Current | 157 A | | | |
| Max Charge/Discharge Current | 179.4 A | | | |
| Rated Charge/Discharge Power | 130.6 kW | 156.7 kW | 182.8 kW | 208.9 kW |
| Auxiliary Power Voltage | AC 220V, 50Hz / 60 Hz | | | |
| **Basic Parameters** | | | | |
| Operating Temperature | -30 to 55 °C | | | |
| Storage Temperature | -30 to 55 °C | | | |
| Dimensions (LxWxH) | 1350x1310x2434 (mm) | | | |
| Weight | ≤2.68 t | ≤3.0 t | ≤3.33 t | ≤3.65 t |
| IP Rating | IP54 | | | |
| Fire Protection Medium | Aerosol | | | |
| Cooling Method | Liquid Cooling | | | |
| Application Altitude | ≤2000 m/<3000 m (Optional, Derated) | | | |
| Acoustic Noise | <79 dB (1m) | | | |
| **Certifications** | | | | |
| Battery Cabinet/Cluster | UL 60730-1、UL9540、UL1973、UL9540A、IEC 62619、IEC 60730-1、IEC 63056、IEC 62477-1、UN 38.3、UN 3480 | | | |
| Battery System | UL9540、FCC Part 15B、IEC 62477-1、IEC 61000-6-2/4、IEC 62933 | | | |

# CONTROL CABINET PARAMETERS

| Item | Specification |
|---|---|
| **System Parameters** | |
| Voltage Range | DC 728~1497.6 V |
| Max Current | 1435.43 A |
| Max Power | 1671.984 kW |
| Auxiliary Power Consumption | AC 480V（UL）/AC 400V（IEC）, 50Hz / 60Hz |
| Operating Temperature | -30 to 55 °C |
| Storage Temperature | -30 to 55 °C |
| Dimensions (LxWxH) | 1350x900x2414(mm) |
| Weight | EU Version ≤0.75 t, US Version ≤1.0 t |
| IP Rating | IP54 |
| Application Altitude | ≤2000 m/<3000 m (Optional, Derated) |

*This document is regularly updated for accuracy and improvement. Please verify you are using the latest version. Illustrations are for reference only.*

# VenturePro Liquid-Cooled Commercial and Industrial Integrated Cabinet

## VenturePro 250 (UL Edition / IEC Edition)

The liquid-cooled commercial and industrial integrated cabinet integrates liquid-cooled modules, a new-generation BMS control system, liquid-cooled PCS, an intelligent liquid-cooled thermal management system and an active fire protection system. It features grid support capabilities, safety protection designs and optimized economic efficiency, suitable for small and medium-sized energy storage projects such as user side and microgrid applications, supporting the construction of new power systems.




## PRODUCT FEATURES

### Flexible Expansion

Modular All-in-One design delivers direct AC output, supporting multi-cabinet AC parallel for flexible capacity scaling with upgraded power & energy density.

### Liquid Cooling for Higher Efficiency

Liquid cooling lifts round-trip efficiency by ~1% vs 2-level topology; 3-level PCS achieves peak efficiency up to 98.3%.

### Cluster-Separated Safety Architecture

Per-cluster independent DC layout eliminates inter-cluster DC parallel to constrain short-circuit current. Cabinets feature full electrical & fire isolation, with cell temperature differential capped ≤3°C for reliable long-term operation.

## PRODUCT SPECIFICATIONS

| Item | VenturePro 250 YXYK-125K/552314-L | VenturePro 250 YXYK-125K/552314-M |
|---|---|---|
| **Battery Parameters** | | |
| Nominal Energy | 250 kWh | |
| Nominal Battery Voltage | DC 832 V | |
| Battery Voltage Range | DC 728 to 936 V | |
| Max Battery Current | 179.4 A | |
| **AC Side Parameters (Grid Connection)** | | |
| Rated Power | 125 kW | |
| Rated AC Output Current | 180 A | 150 A |
| Rated Grid Voltage | 400 V | 480 V |
| Output Voltage Range | -15% to 10% | -10% to 5% |
| Rated Frequency | 50/60 Hz±5 Hz | 60 Hz±3 Hz |
| Off Grid Switching Time | <20 ms | |
| THDI | <3%(Rated Power) | |
| **Basic Parameters** | | |
| Product Dimensions (LxWxH) | 1400x1350x2250(mm) | |
| Weight | ≤3.5 t | |
| Max Allowable Altitude | ≤2000 m/<3000 m (optional, derated) | |
| Allowable Ambient Temperature | -30 to 50℃ | |
| System Cycle Life | ≥8000 cycles | |
| Fire Protection | Aerosol | |
| IP Rating | Enclosure IP54 | |
| Cooling Method | Liquid Cooling | |
| Acoustic Noise | <79 dB (1m) | |
| Certifications/Reports | UL 60730-1、UL9540、UL1973、UL9540A、FCC Part 15B、IEC 62619、IEC 60730-1、IEC 63056、IEC 62477-1、IEC 61000-6-2/4、UN 38.3、UN 3480 | |
| **Warranty** | | |
| Standard | 5 years (Included) | |
| Extended Warranty | 5/10 years | |

*This document is regularly updated for accuracy and improvement. Please verify you are using the latest version. Illustrations are for reference only.*

# GridUltra Air-Cooled Energy Storage System

## Gridultra 2058

Adopts non-walk-in containers, and the modular design improves space utilization inside the cabinet. The advanced air-cooling circulation concept, intelligent temperature control architecture, smart fire protection and pressure relief system, as well as intelligent energy management and dispatch system enable effective thermal management for the air-cooled energy storage system, ensure safe operation and monitor cell status in real time.




## PRODUCT FEATURES

### Modular Container System

Uses customized non-walk-in containers with a modular design, high integration, supporting fast delivery, quick installation, and maintenance.

### Long-Life Air-Cooled Battery System

Cycle life ≥8000 cycles, with a design life of approximately 15 years. Ensures stable operation.

### Smart Air-Cooled Safety Compartment

The battery cabinet features IP54 protection rating, intelligent fire protection system with multi-point monitoring and early warning, and fire extinguishing function. Independent air-cooling strategy dynamically controls the ambient temperature inside the cabinet.

# PRODUCT COMPOSITION

### Energy Storage System

The cabinet consists of 8 battery clusters, 1 core control panel, 1isolated PCS, 1 busbar system, 1 fire protection system and 1 temperature control system.

### Battery Cluster

Each battery cluster is composed of 16 battery modules and 1 high-voltage control box connected in series.

### Battery Module

Each battery module is assembled with 16 lithium iron phosphate cells in 1P16S configuration. Modular design facilitates handling, installation and maintenance.

# PRODUCT SPECIFICATIONS

| Item | GridUltra 2058 |
|---|---|
| | **Battery Parameters** |
| Configuration | 8P256S |
| Nominal Energy | 2058 kWh |
| Nominal Voltage | DC 819.2 V |
| Voltage Range | DC 716.8 to 921.6 V |
| | **System Parameters (0.25P)** |
| Rated Output Power | 500 kW |
| Max Output Power | 550 kW |
| Max Output Current | 794 A |
| Rated Voltage | 400 V |
| Voltage Range | -20% to 15% |
| Rated Frequency | 50/60Hz±5Hz |
| THDI | <3% (Rated Power) |
| Operating Temperature | -30 to 50℃ |
| Storage Temperature | -20 to 45℃ |
| Application Altitude | ≤2000 m/<3000 m (Optional, Derated) |
| | **Basic Parameters** |
| Product Dimensions (LxWxH) | 6058x2438x2896（mm） |
| Weight | Approximately 23 t |
| IP Rating | IP54 |
| Cooling Method | Air Cooling |
| Certifications/Reports | IEC 62619、IEC 63056、IEC 62477-1、IEC 61000-6-2/4、UN 38.3、UN 3536 |

*This document is regularly updated for accuracy and improvement. Please verify you are using the latest version. Illustrations are for reference only.*

# VenturePro Air-Cooled Commercial and Industrial Integrated Cabinet

## VenturePro 112

Adopts non-walk-in containers, and the modular design improves space utilization inside the cabinet. The advanced air-cooling circulation concept, intelligent temperature control architecture, smart fire protection and pressure relief system, as well as intelligent energy management and dispatch system enable effective thermal management for the air-cooled energy storage system, ensure safe operation and monitor cell status in real time.




## PRODUCT FEATURES

### Modular Design

Allows easy scalable expansion, with native PV & diesel generator input support. AC-side parallel connection of up to 10 units delivers total 1.12 MWh energy storage capacity.

### Air-Cooled Topology for Optimal Efficiency

Air cooling configuration delivers high DC-DC conversion efficiency, peaking at 97.8%

### Precise Single-Cluster Control for Safety and Longevity

Precise single-cluster design avoids DC parallel to restrict short-circuit current. Cabinets feature electrical & fire isolation, with cell temperature spread ≤ 6°C for enhanced safety and longer cycle life.

## APPLICATION SCENARIOS OF AIR-COOLED NDUSTRIAL AND COMMERCIAL INTEGRATED CABINETS

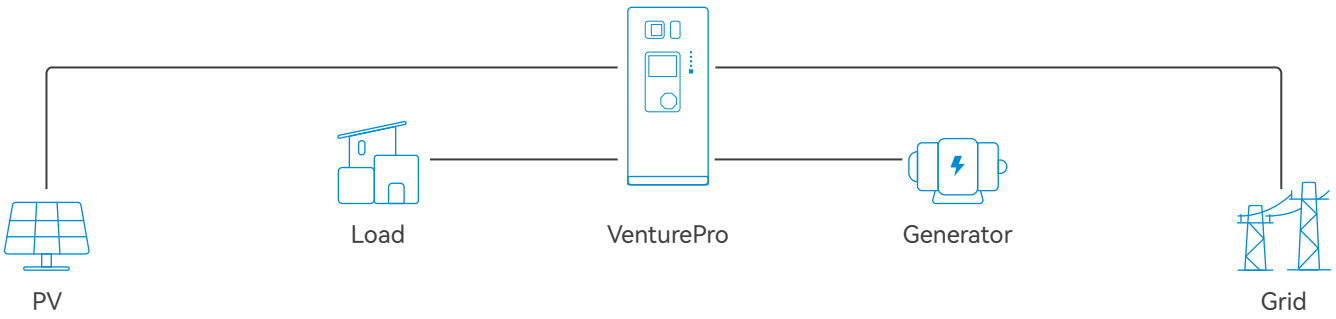


## PRODUCT SPECIFICATIONS

| Item | VenturePro 112 |
|---|---|
| | **Battery Parameters** |
| Nominal Energy | 112 kWh |
| Max Current | 179.4 A |
| Rated Charge/Discharge Rate | 0.5 P |
| Battery Voltage Range | DC 313.6 to 403.2 V |
| | **AC Side Parameters** |
| Rated AC Power | 50 kW |
| Rated AC Voltage | 400 V±15% |
| Rated Frequency | 50/60 Hz ± 5 Hz |
| Rated Current | 76 A |
| | **PV Parameters** |
| Max PV Power | 96 kW |
| Rated Input Voltage | 600 Vd.c. |
| Start-Up Voltage | 180 Vd.c. |
| Max Input Current | 40A / 40A / 40A / 40A |
| Number of MPPTs / Max String Paths | 4 / 8 |
| Max Input Power per MPPT | 24 kW |
| | **Basic Parameters** |
| Product Dimensions (LxWxH) | 990x1300x2230(mm) |
| Weight | Approximately 1.8 t |
| Max Allowable Altitude | ≤2000 m/<3000 m (optional, derated) |
| Operating Temperature | -25 ℃ to 55 ℃ |
| System Cycle Life | ≥8000 cycles |
| IP Rating | Enclosure IP54 |
| Cooling Method | Air Cooling |

*This document is regularly updated for accuracy and improvement. Please verify you are using the latest version. Illustrations are for reference only.*

# DeepCore Ultra Immersion Liquid-Cooled Commercial and Industrial Integrated Cabinet

## DeepCore Ultra 265

DeepCore Ultra 265 is an all-in-one energy storage unit from RelyEZ Energy Storage for commercial and industrial scenarios. It adopts immersion liquid-cooling technology with battery cells submerged in coolant, integrating intelligent control and power conversion technologies to deliver stable and long-lasting energy storage performance for users.




## PRODUCT FEATURES

### Cluster-Isolated Energy Storage System

Independent control for each cluster with no parallel connection on the DC side, limiting short-circuit current. Independent energy storage cabinets realize electrical and fire protection isolation design. Cell temperature difference ≤2.5 °C, helping optimize system operation.

### Intelligent Controlled Energy Storage System

Centralized cooling technology paired with AI control algorithms enables intelligent system regulation. PCS adopts three-level topology with a system efficiency of 98%, about 1% higher than that of two-level topology.

### Immersion Liquid-Cooled Safety System

Battery cells are immersed in hydrocarbon-based immersion fluid to isolate oxygen, suppress combustion chain reactions, and reduce fire and explosion risks.

VenturePro 265

## PRODUCT SPECIFICATIONS

| Item | DeepCore Ultra 265 |
|---|---|
| | **Battery Parameters** |
| Nominal Energy | 265 kWh |
| Configuration | 1P264S |
| Rated Charge/Discharge Rate | 0.5P |
| Battery Voltage Range | DC 686.4 to 963.6 V |
| | **AC Side Parameters** |
| Rated Power | 132 kW |
| Rated Voltage | 400 V |
| Voltage Range | 340~460 V |
| Total Current Harmonic Distortion | ≤ 3% |
| Voltage Ripple Factor | ≤ 1% |
| Power Factor | 0.99/ - 1 to 1 |
| | **Basic Parameters** |
| Product Dimensions (LxWxH) | 1370x1400x2378 (mm) |
| Weight | Approximately 3.3 t |
| IP Rating | IP55 |
| Cooling Method | Lmmersion Liquid Cooling for Battery Modules, Air Cooling for PCS |
| Noise | ≤65 dB (A) |
| Auxiliary Power | Built-in Power Supply |
| Max System Efficiency | 90.5% |
| Operating Humidity Range | 0 to 100% |
| Operating Temperature Range | -30 °C to 55 °C |
| Max Allowable Altitude | ≤3000 m/<4000 m (Optional, Derated) |
| Fire Protection | Aerosol，Smoke Detector，Audible and Visual Alarm，<br>Flammable Gas Detector，Exhaust Fan，<br>Optional (Pressure Relief Device, Water-Based Fire Protection) |
| Communication Method | Ethernet |
| Communication Standard | Modbus TCP |

*This document is regularly updated for accuracy and improvement. Please verify you are using the latest version. Illustrations are for reference only.*

# RelyEZ OS Energy Storage Ecosystem

Asset Manager
## EnergyCloud

Cloud Asset Manager — empowering plant-level cluster analytics, deep historical insights, intelligent fault diagnosis & reasoning, plus continuous model training and strategy rollout.

Decision Engine
## EnergyNexusAI

EnergyNexusAI powers the RelyEZ software ecosystem as its core technology engine, enabling intelligent prediction, analysis, and decision-making across critical business scenarios including ESS asset operation, energy management, O&M, and power trading.

Trader
## EnergyMarket+

Leveraging big data-powered AI for electricity price forecasting and trading strategy optimization, driving sustained market revenue growth. Fuses market disclosures, trading intelligence, and weather data into a unified predictive engine for precise market forecasting.

Risk Officer
## EnergyOMS

Encompassing production monitoring, intelligent fault alerts, shift & patrol management, and equipment health diagnostics across all critical operations — driving sustained improvements in O&M efficiency and plant stability through fully standardized workflows and digital operations.

Grid-Side Optimization
## EnergyEMS

An industrial-grade management and control system purpose-built for grid-side standalone BESS plants, engineered to meet grid dispatch, safety, and high-reliability standards — the central hub enabling energy storage to actively participate in grid operations and ancillary services.

Plant Analyst
## EnergyHub

Seamlessly integrates equipment monitoring, battery analytics, alarm management, and intelligent strategy execution — empowering users with peak shaving, demand charge optimization, energy efficiency, and cost control to maximize both the economic returns and operational reliability of C&I energy storage investments.



# Full Lifecycle Product Matrix



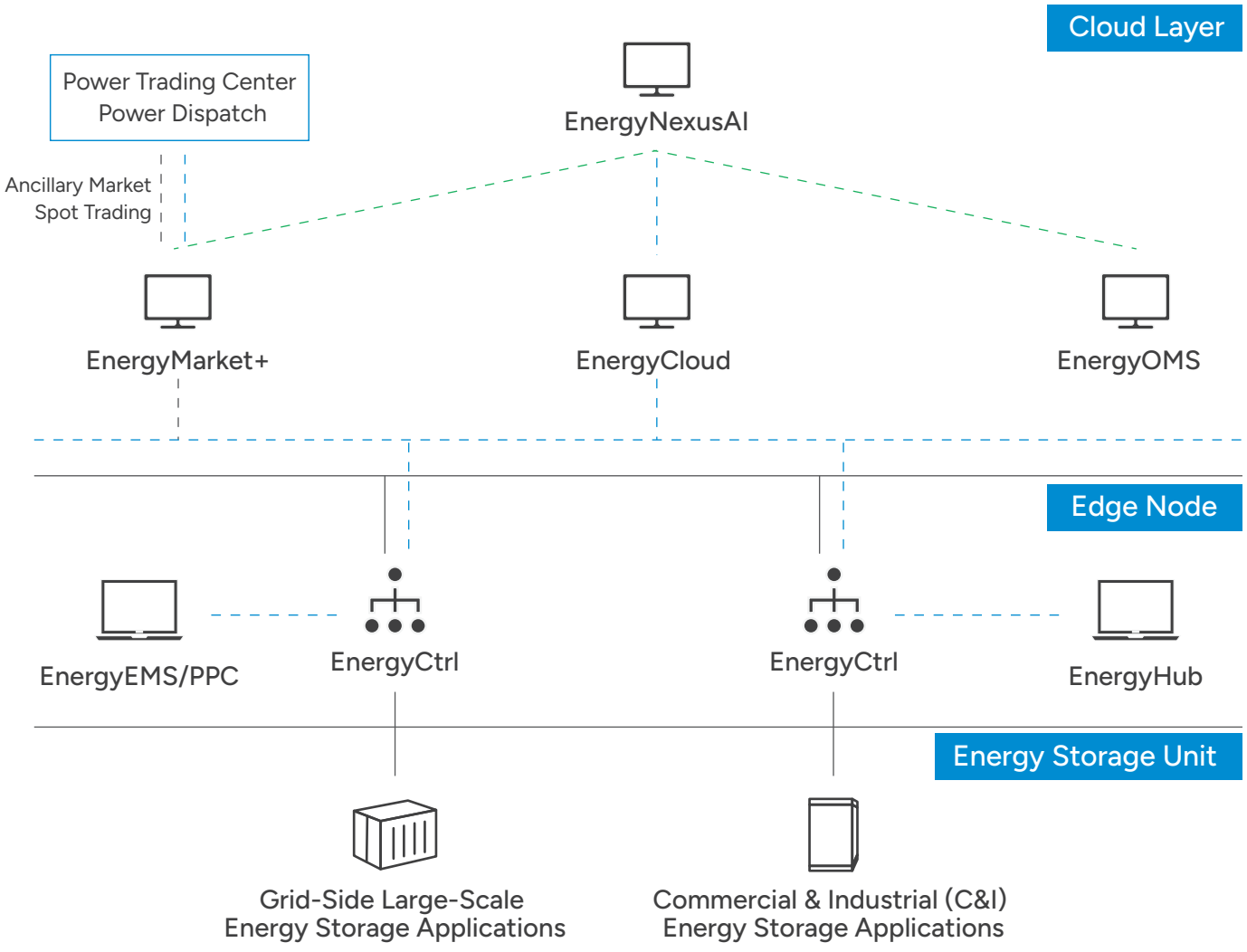

# Service System

We have a professional team of service engineers, with a presence in over 100 countries and regions worldwide. Leveraging our technical expertise and relentless pursuit of excellence, we have successfully delivered a series of outstanding energy storage projects.





# Partners

antuko

ingsoft InterWatt

HERION

Lynays Entreprises

Bimergen Energy

BatteryCloud

CHNT POWER

国家电投 SPIC 融和元储 ROBESTEC

HITHIUM 海辰新能源

GOLDWIND

QAES

risen

平高集团有限公司 PINGGAO GROUP CO.,LTD.

林洋能源 LINYANG ENERGY

中国华能 CHINA HUANENG

南瑞继保 NR Electric

CYG长园

许继电气股份有限公司

中国西电集团 CHINA XD GROUP 陕西宝光真空电器股份有限公司 SHAANXI BAOGUANG VACUUM ELECTRIC DEVICE CO.,LTD

中国电建 POWERCHINA

中广核 CGN

三峡水利 THREE GORGES WATER CONSERVANCY

三峡能源

中国大唐集团公司 China Datang Corporation

BATTERO TECH

# Create Tier-1 BESS Assets



**RelyEZ Energy Storage Technology Co., Ltd.**
A3802, 3803, 3804 Building 11A, Shenzhen Bay Science and Technology Ecological Park, No. 16 Keji South Road, Nanshan District, Shenzhen, Guangdong, China
www.relyez.com relyez@relyez.com

© RelyEZ reserves the final right of interpretation of all contents in this brochure

V202611